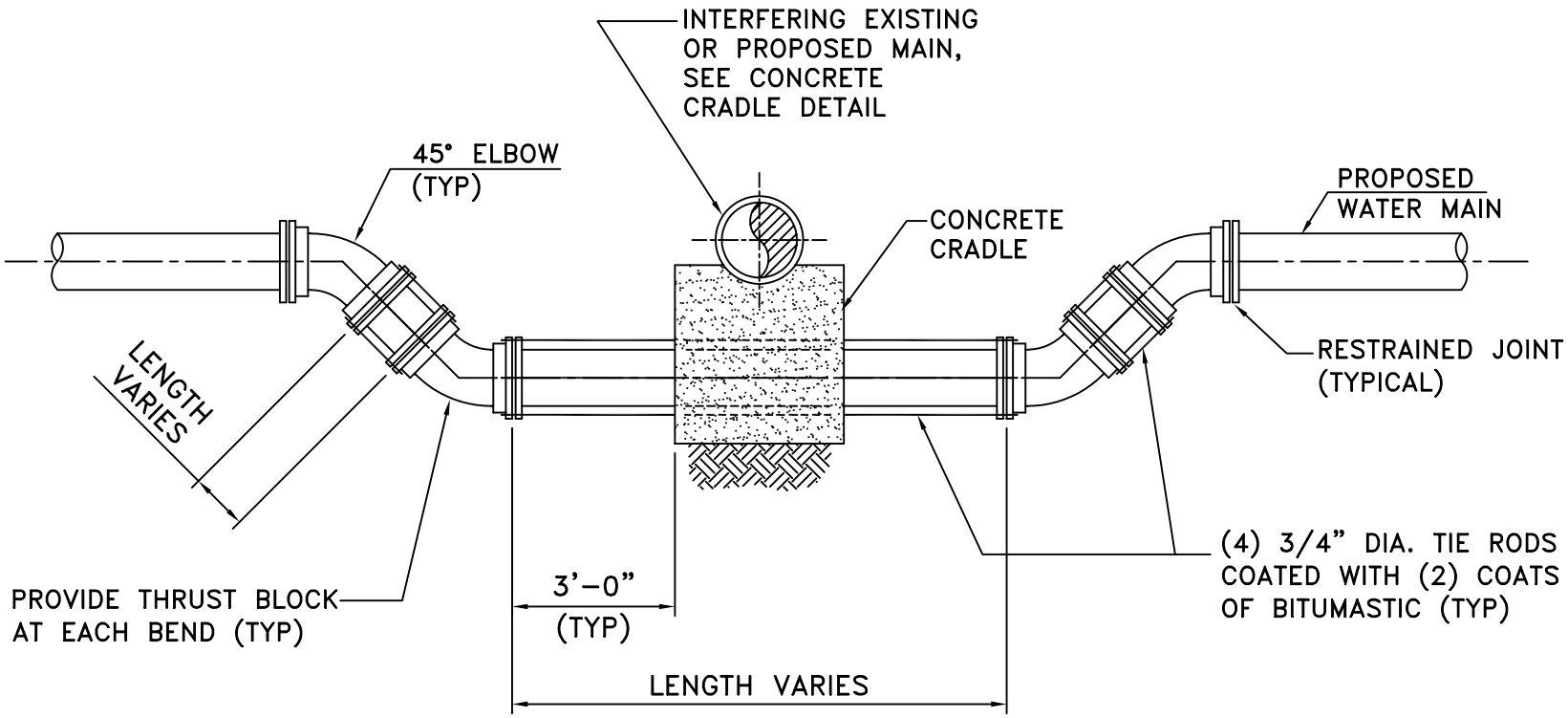

BY	DATE	REVISIONS

TOWNSHIP OF FLORENCE
WATER & SEWER DEPARTMENT

UTILITY CROSSING
OFF - SET

DATE : 3/96
DWN BY :

29