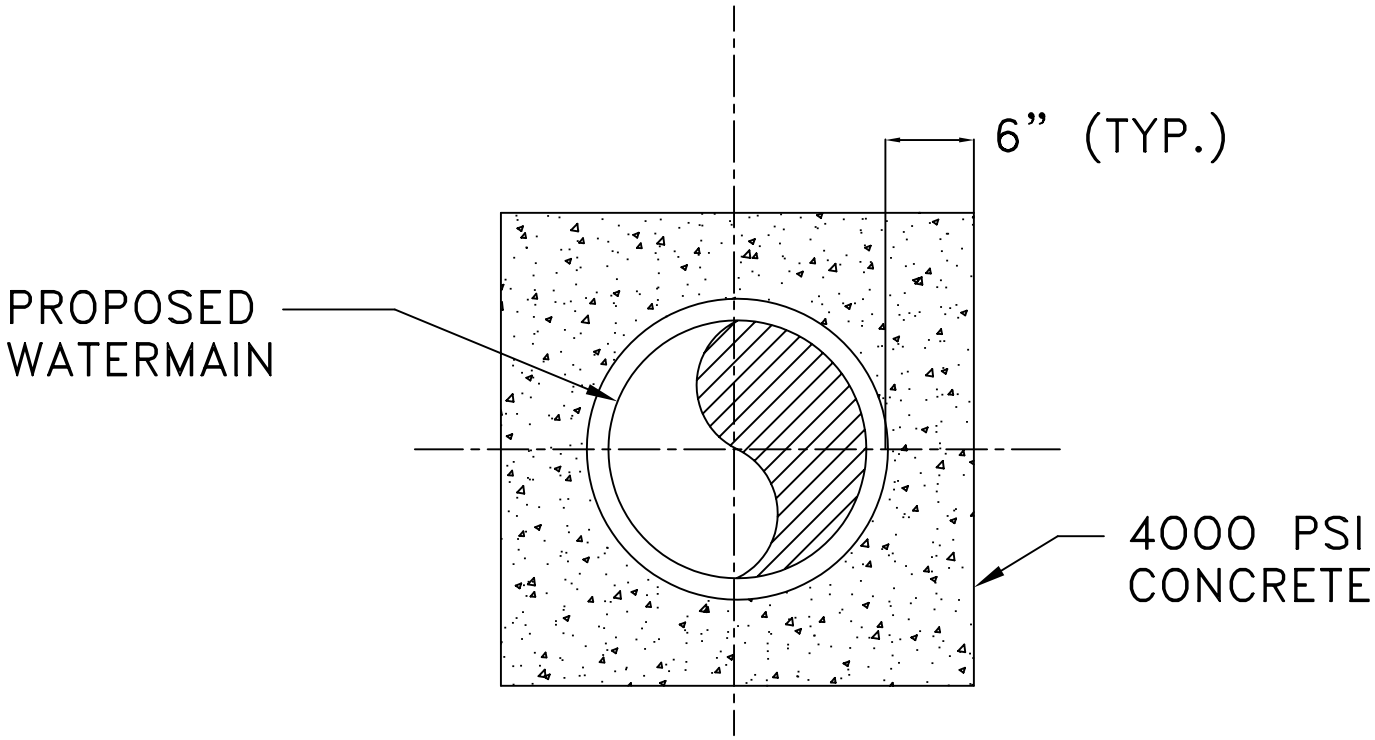

BY	DATE	REVISIONS

TOWNSHIP OF FLORENCE
WATER & SEWER DEPARTMENT

CONCRETE ENCASEMENT DETAIL

DATE : 4/95

DWN BY :

27